ENGINEERING
TOMORROW

Installation Guide

GreenCon RC-C2/C4
Room thermostat

GB

1. Installation Steps

User Guide can be downloaded from: heating.danfoss.com.

1. **Installation must be done by an authorised electrician.**
2. The room thermostat should be installed at approx. 1.5 m above floor and where the effects of sunlight, draught or other heat sources (eg. TV's) are avoided, see fig. 1.
3. First of all, carefully remove the cover, see fig. 2.
4. Connect the wire before mounting the back plate to the wall box using the enclosed screws, see fig 3. Then mount the cover to the back plate, see fig 4.

2. Wiring

1. Dimensions, see fig. 5
2. Wiring diagram, see fig. 6 to fig.9
3. Follow the illustrations to complete the wiring:
   1) Wiring for SPST on/off control
      . RC-C4, see fig. 6
      . RC-C2, see fig. 7
   2) Wiring for SPDT on/off control
      . RC-C4, see fig. 8
      . RC-C2, see fig. 9

GB

3. Error codes

Display	Description
E1	Alarming for short circuit of sensor
EE	EEPROM chip error
Lo	Indicating temperature lower than 0°C
Hi	Indicating temperature higher than 50°C

4. Notes

1. Correct wiring is essential; using instrument to confirm L and N before wiring is recommended.
2. Don't remove too much of the insulation cover from the wire to avoid short circuit caused by the naked wire touching the metal 86 size mounting wall box.
3. Don't let the screw press or touch the wire when using screw to fix room thermostat in wall box. A short-circuit risk exists if the wire insulation cover is damaged by the screw, and if the naked wire connects with the screw.
4. If walls must be painted, mount the room thermostat after painting, to avoid dust or paint material penetrating the room thermostat and thus damaging the PCB.
5. The max load of relay is 3 A (resistive) or 1 A (induc-

tive). The relay will be damaged if the load exceeds the limit.

6. Don't cover the thermostat, for instance by hanging towels directly in front of it.
7. The room thermostat should be connected to the corresponding actuator and valve in individual room temperature control.

5. Technical Specifications

Feature	Description
Approval	CE Marking, EN60730
Ambient temperature	0 - 45 ° C
IP Class	30
Max. load, inductive	<1 A
Max. load, resistive	<3 A
Power consumption	2 W
Power supply	85-250 Vac, 50/60 Hz
Room temp. set range	5 - 35 ° C
Shell material	ABS + PC

GB

6. Interface

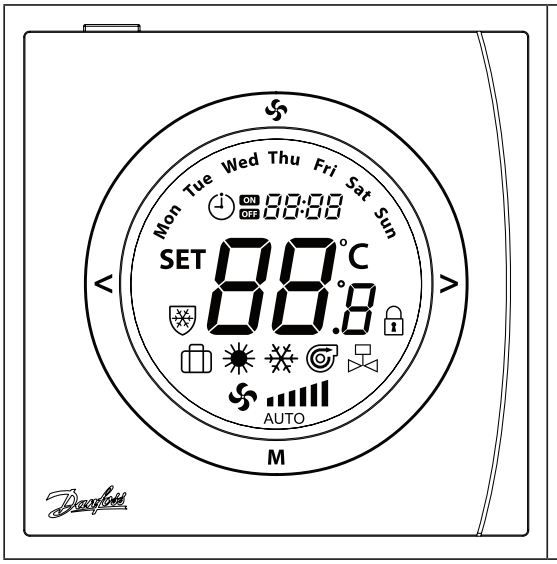

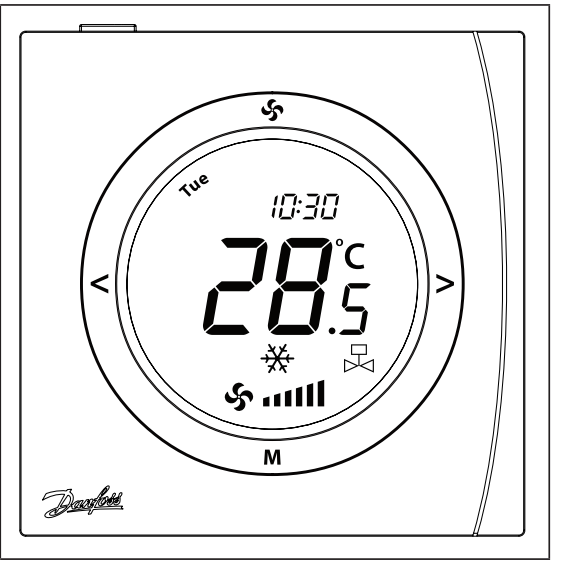

Symbols	Description	Symbols	Description
88.8 °C	Temperature indication		Valve
SET	Temperature setting		Frost protec-tion
	Heating		Eco mode
	Cooling		Keyboard lock
	Ventilation	ON OFF	Timer ON/OFF
AUTO	Fan control		5/2 4 event program
88:88	Clock	Mon Tue Wed Thu Fri Sat Sun	Actual week-day

7. Operation

GB

1. Power On/Off and Eco mode.
   - When powered off, press power button on top of GreenCon to turn on;
   - When powered on, press power button for 2 seconds to turn off thermostat;
   - When powered on, short press power button to enter ECO mode;
   - In ECO mode, press" **<** " or" **>** " for temperature setting, short press power button to exit.
2. Mode selection
   - Press " **M** " to change system working mode: Cooling " ", heating " " or ventilation " "
3. Setting temperature
   - Press " **<** " to reduce temperature, press " **>** " to raise temperature. (0.5°C changed each press)
   - During setting temperature, " **SET** " icon will be displayed, after setting finished, this icon disappears and LCD shows actual temperature.
4. Fan speed selection
   - Press " " to select (close) (Low), (Med), (Hi), AUTO (Auto);
   - In Auto mode, fan speed will change according to the difference between room temperature and setting temperature, Low-speed when this difference exceed 1°C, Med-speed when exceed 2°C, Hi-speed when exceed 3°C.

*In default setting, fan speed will be "Close" when

GB

room temperature reaches setting temperature. See parameter P11 in chapter 9 for more details.

5. Time setting and ON/OFF timer

- Time setting

  Long press“ ” for 3 seconds till “hh” start flashing, press “ **<** ” or “ **>** ” to adjust hour;

  Short press “ ” , “mm” flash, press “ **<** ” or “ **>** ” to adjust minute;

  Short press “ ” , “week” flash, press “ **<** ” or “ **>** ” to adjust weekday;

- Timer On/Off setting

  After finishing time setting, short press“ ” to configure timer On/Off function, press other button or wait for 6 seconds to exit.

  - Short press “ ” till “**ON**” start flashing;

  Press“ **<** ” or “ **>** ” to adjust timer “**ON**” hour;

  Press “ ” to confirm;

  Press“ **<** ” or “ **>** ” to adjust timer “**ON**” minute;

  Press “ ” to confirm;

  - After setting timer “**ON**”, “**OFF**” start flashing;

  Press“ **<** ” or “ **>** ” to adjust timer “**OFF**” hour;

  Press “ ” to confirm;

  Press“ **<** ” or “ **>** ” to adjust timer “**OFF**” minute;

  Press “ ” to confirm;

- Cancel ON/OFF timer

During above steps, adjust hour and minute to “--:--“ to cancel timer function; Or configure P02 to “02” in parameter setting to disable timer function.

6. Keyboard lock

Press and hold "**M**", within 6 seconds, short press " **>** " to lock keyboard, icon " 🔒 " will be displayed on LCD, repeat this to unlock.

7. Reset

During power off, press and hold both "**M**" and" **<** ", " **>** " for 10 seconds, thermostat will be reset and restart.

8. Auto switch between heating and cooling

When auto switch between heating and cooling On, heating and cooling is automatically controlled by the parameters P16,P17 and P19. The temperature is controlled by the set temperature and the dead zone is decided via the parameters P16 for Normal mode and P17 for ECO mode.

9. Floor/radiator for heating & fan coil for cooling

If P18 is Off

The fan is controlled by the Fan Speed Selection

If P18 is On

The fan is disabled, when heating is on. When cooling,the fan is controlled by the Fan Speed Selection

8. Programming

1. 5-2 day programming

To enable this function, please configure P01 to "02" in parameter setting.

When this function is enabled, system automatically changes setting temperature four times per day.

GB

Both setting temperature and event time can be modified.
Programming function allows users to define temperature setting for 4 time period during workdays (Mon-Fri) and weekend (Sat-Sun)

2. Default set up
   Starting time and temperature for each period
   7:00 / 18 °C / 28°C
   9:00 / 22 °C / 26°C
   18:00 / 18 °C / 28°C
   21:00 / 15 °C / 30°C
3. Programming of workday set up;
   Long press“ ” for 5 seconds till “**Mon.Tue.Wed. Thu.Fri**” icon displays;
   Press “ **<** ” or “ **>** ” to adjust starting hour of first event, press “ ” to confirm;
   Press “ **<** ” or “ **>** ” to adjust heating temperature during first event, press “ ” to confirm;Press “ **<** ” or “ **>** ” to adjust cooling temperature during first event, press “ ” to confirm;
   Repeat above operation for next 3 events
4. Programming for weekend set up;
   After finishing programming of work days, “**Sat.Sun**” will appear on screen, repeat above steps to set starting time and temperature on weekends.
   From next event, GreenCon will automatically change setting temperature according to this set up.

9. Parameter setting

GB

Long press "**M**" for 6 seconds to enter parameter setting mode.Then, short press "**M**" to select parameter; press " **<** " or " **>** " to adjust value.

Parameter	Definition	Setting range	Factory setting
P01	Programming function On/Off	01: Off ; 02:5/2 days 4 event	01
P02	Timer ON/OFF	01:ON ; 02:OFF	01
P03	Maximum room temperature setting	5-35°C	30°C
P04	Minimum room temperature setting	5-35°C	5°C
P05	Frost protection	01: ON; 02: OFF	01
P06	Frost protection temperature	5-17°C	5°C
P07	Default heating temperature	5-35°C	20°C
P08	Default cooling temperature	5-35°C	25°C
P09	Default heating temperature for ECO mode	5-35°C	15°C

GB

Parameter	Definition	Setting range	Factory setting
P10	Default cooling temperature for ECO mode	5-35°C	28°C
P11	Fan speed when reaching setting temperature (DA/ DB configuration)	01: Low (DA); 02: Stop (DB)	02
P12	Clock	01: 24hour; 02: 12hour	01
P13	Display room temperature after turned off	01: OFF; 02: ON	01
P14	Save user set up when powered off.	01: ON; 02: OFF	01
P15	Auto switch between heating and cooling	01:Close 02: Open	01
P16	deadBand for Normal Mode	0.5°C-5°C	1°C
P17	deadBand for ECO Mode	5°C-10°C	5°C
P18	Floor/radiator for heating & fan coil for cooling	01: Off; 02 On	01

GB

Parameter	Definition	Setting range	Factory setting
P19	Temperature setting range when auto switch between heating and cooling	5°C-35°C	25°C
P20	AC power return status	01:Start up in last known mode 02:Stand by	01

Note:
Parameters P15-P19 are only available on GreenCon RC-C4.

CN

1. 安装指南

可通过以下网址下载《用户指南》：heating.danfoss.com.cn

1. 必须由经过专业培训合格的电工进行安装。
2. 室内温控器应当安装在地面上方大约1.5米处，并且避免受到日光、气流或者其他热源（例如：电视）的影响。请见图1。
3. 首先，小心拆下前盖。请见图2。
4. 在将背板固定至暗线箱之前，使用随附的螺钉连接导线， 请见图3。然后将盖子安装至背板。请见图4。

2. 接线

1. 外形尺寸，请见图5。
2. 接线端子，请见图6到图9。
3. 请按照以下说明完成接线：
   1） 当阀门是两线阀时：
      - RC-C4时，请见图6。
      - RC-C2时，请见图7。
   2） 当阀门是三线阀时：
      - RC-C4时，请见图8。
      - RC-C2时，请见图9。

CN

3. 错误代码

显示屏	说明
E1	室温传感器故障
EE	EEPROM故障
Lo	房间温度低于0℃
Hi	房间温度高于50℃

4. 注意事项

1. 正确接线至关重要；接线之前，建议使用仪器确定L与N。
2. 请勿从导线上拆下过多绝缘护套，以免裸露导线接触金属86盒造成短路。
3. 使用螺钉固定暗线箱中的室内温控器时，避免螺钉按压或接触导线。如果螺钉将导线绝缘护套损坏，以及裸线与螺钉连接，则有可能造成短路。
4. 如果必须对墙壁涂漆，请在涂漆后安装室内温控器，以免灰尘或涂料渗入室内温控器，从而损坏PCB。
5. 继电器的最大负载为3 A（纯阻性）或1 A（感性负载）。如果负载超过限值，则继电器将会受损。
6. 请勿覆盖温控器，例如：将毛巾直接挂在温控器前部。
7. 进行分室温控时，温控器所在房间与阀门所在的回路要对应。

CN

5. 技术参数

特点	说明
认证	CE标志， EN60730
环境温度	0 - 45 °C
IP防护等级	30
最大负载（感性）	<1 A
最大负载（阻性）	<3 A
功耗	2 W
电源	85-250 Vac, 50/60 Hz
室温设定范围	5 - 35 °C
外壳材质	ABS + PC

6. 显示界面

CN

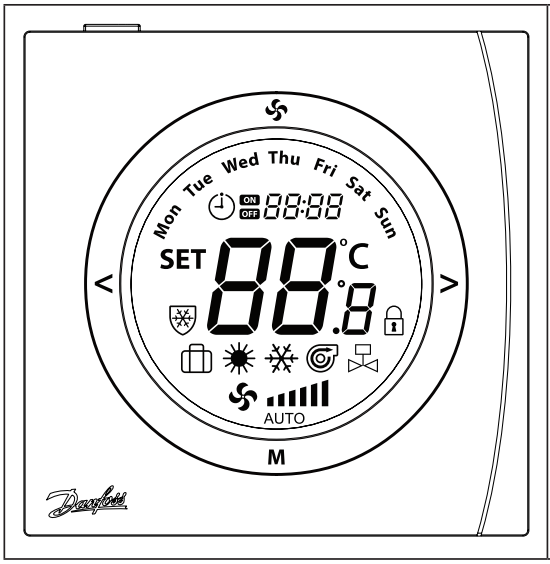

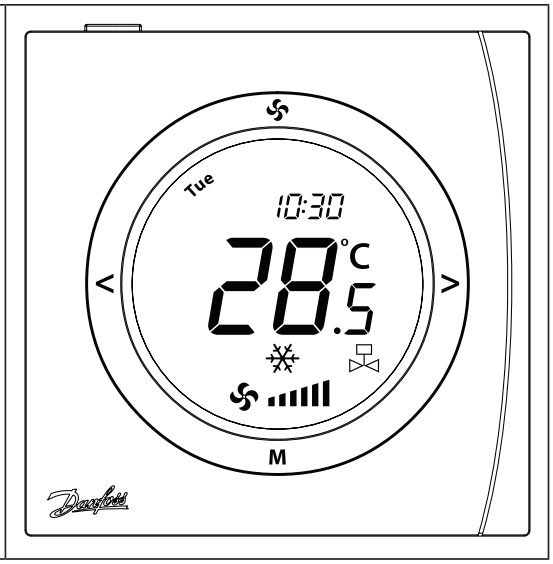

图标	含义	图标	含义
88.8 °C	温度显示		电动阀门
SET	温度设定		低温保护
	供热模式		节能模式
	制冷模式		键盘锁
	通风模式	ON OFF	定时功能开/关
AUTO	风速显示		5/2 4时段编程
88:88	时钟	Mon Tue Wed Thu Fri Sat Sun	星期显示

CN

7. 操作说明

1. 开关机和节能模式

关机状态下：短按位于GreenCon顶部电源键开机；

开机状态下：长按2s关机，短按电源键进入节能模式，液晶显示“ ”；

节能模式下：按“**<**”和“**>**”设置节能模式的温度，短按电源键返回开机状态。

2. 设置运行模式

开机状态下，短按“**M**”键切换运行模式。

运行模式包括（供热）、（制冷）和（通风）。

3. 设置房间温度和风速

开机状态下，按“**<**”降低设置温度，按“**>**” 升高设置温度，液晶上显示。

设定温度时，液晶显示“**SET**”，释放按键后，液晶显示当前的实际温度。

短按“ ”键设置风速。

风速包括（关闭）、（低）、（ 中）、（高）和 AUTO（自动）档，短按“ ”键循环选择。

*默认设置下，当房间温度达到设定温度时，风机自动关闭，改变该设置请见第9节P02参数设置。

4. 设置时间和定时开关机

长按“ ”3秒，直到“hh”开始闪烁，按“**<**”和“**>**”调整小时；

再次短按“ ”此时 “mm”闪烁，按“**<**”和“**>**”调整分钟；

再次短按“✠”此时“week”闪烁，按“**<**”和“**>**”调整星期。

完成设置之后，如果开启定时开关机功能则短按“✠”键进入定时开关机的时间设置，否则按任意按键可退出（无操作6秒钟自动退出）。

若开启定时开关机功能，短按“✠”键，“ON”闪烁进行定时开机设置。

按“**<**”和“**>**”设置定时开机的小时。

按“✠”键确认设置。

按“**<**”和“**>**”设置定时开机的分钟。

按“✠”键确认设置。

“OFF”闪烁进行定时关机设置。

按“**<**”和“**>**”设置定时关机的小时。

按“✠”键确认设置。

按“**<**”和“**>**”设置定时关机的分钟。

按“✠”键确认设置。

把分钟或小时设置为“--”表示该时间无效。

5. 键盘锁

按住“**M**”键，6秒钟之内短按“**>**”锁定全部按键。重复该操作可退出锁定。

6. 复位

在关机状态下，同时按住“**M**”键和“**<**”、“**>**” 键10秒，复位完成后会自动开机。

7. 冷热自动切换功能

如果开启了冷热自动切换功能，制冷制热模式由温控器根据室温实现控制，同时在液晶 上会显示自动模式下当前的冷热状态，该功能需要同时设置P16, P17和P19。

8. 制热模式下风机停止

CN

如果开启了该功能那么在制热模式下风机不起作用，也不能改变风机速度。

8. 5/2时间编程

如果选择了编程功能，正常工作状态下，系统会根据事先设定好的时间自动改变设定温度；
编程操作将一个星期分为两部分：工作日和休息日，每部分有4个时段。

1）.默认设置
各时段默认开始时间和供热/制冷温度：
7:00 / 18 / 28
9:00 / 22 / 26
18:00 / 18 / 28
21:00 / 15 / 30
2）.工作日编程
长按“✇”键5秒，直到出现显示**Mon.Tue.Wed. Thu.Fri** 。
按“**<**”和“**>**”设置第一个时段的开始时间
按“✇”键确认设置。
按“**<**”和“**>**”设置时段内的供热温度。
按“✇”键确认设置。
按“**<**”和“**>**”设置时段内的制冷温度。
按“✇”键确认设置。
重复上述操作，完成2-4时段的设置；
“OFF”闪烁进行定时关机设置。
3）.休息日编程
结束工作日编程后，界面显示**Sat.Sun**；
其余设定与工作日编程的操作方法相同。

9. 参数设定

CN

长按“M”6秒钟进入参数设置模式。短按“**M**”选择设置的参数项，按“**<**”和“**>**”调整该参数的值。参数表如下所示。

CN

序号	功能定义	功能选择及设定	默认
P01	工作模式	01：手动； 02：5+2天4时段高级可编程	01
P02	定时开关机功能	01：开启； 02：关闭	01
P03	最高房间温度限制	5-35℃	30℃
P04	最低房间温度限制	5-35℃	5℃
P05	防冻保护功能	01：开启； 02：关闭	01
P06	防冻保护温度设定值	5-17℃	5℃
P07	默认制热温度设定点	5-35℃	20℃
P08	默认制冷温度设定点	5-35℃	25℃
P09	节能模式制热温度设定点	5-35℃	15℃
P10	节能模式制冷温度设定点	5-35℃	28℃
P11	DA/DB设置	01：DA（达到设定温度时风机低速运行）； 02：DB（达到设定温度时风机停止运行）	02

CN

序号	功能定义	功能选择及设定	默认
P12	时钟显示选择	01：24hour； 02：12hour	01
P13	关机后温度显示状态	01：不显示当前温度；02：显示当前温度	01
P14	保存用户设置	01：开启； 02：关闭	01
P15	冷热模式自动切换	01：关闭 02：开启	01
P16	deadBand for Normal Mode	0.5℃ - 5℃	1℃
P17	deadBand for ECO Mode	5℃ - 10℃	5℃
P18	制热时风机停止	01:不影响 02：风机停止	01
P19	冷热模式自动切换设定温度数值	5-35℃	25℃
P20	重新上电后状态	01：恢复断电前 状态 02：关闭	01

注：
参数P15-P19只在RC-C4中可用

CN

Fig. 1

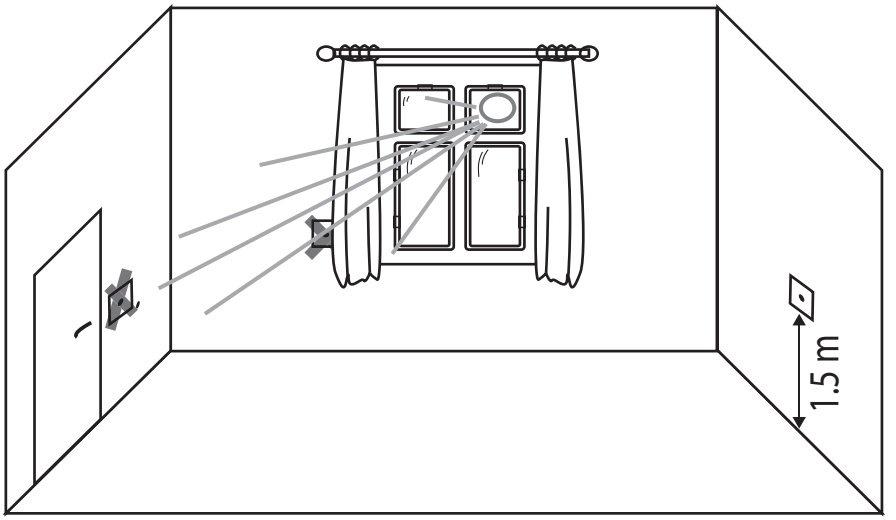

Fig. 2

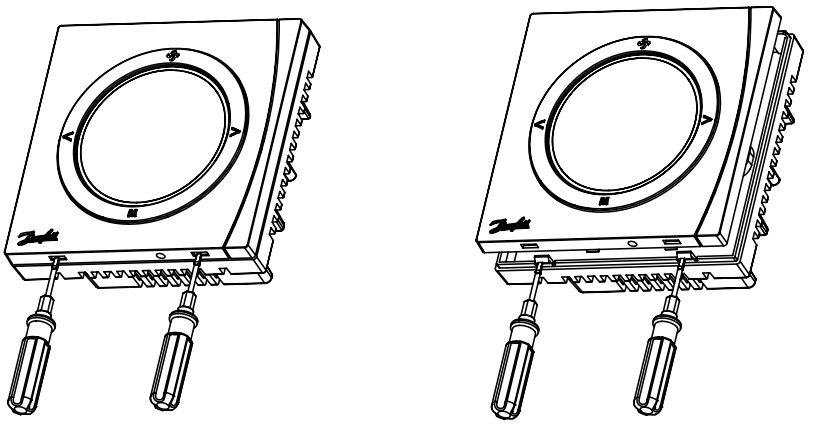

Fig. 3

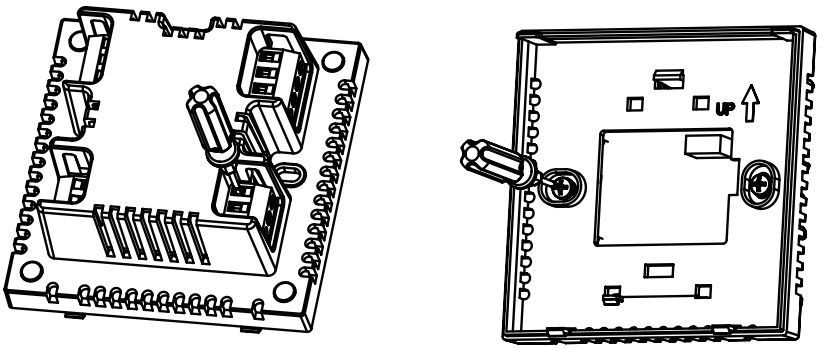

GB

Fig. 4

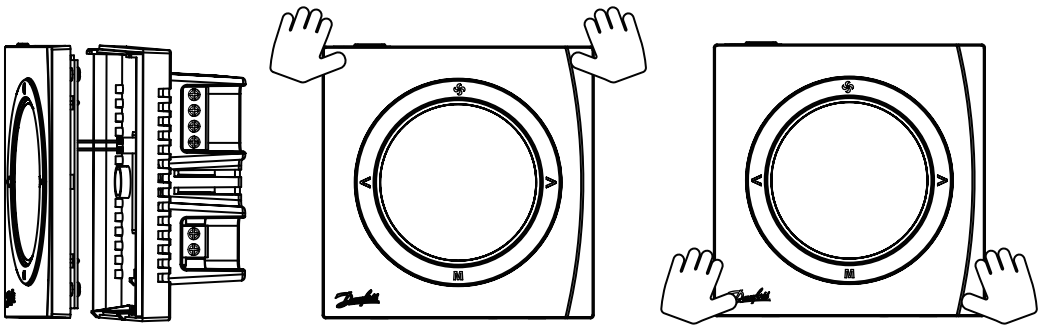

Fig. 5

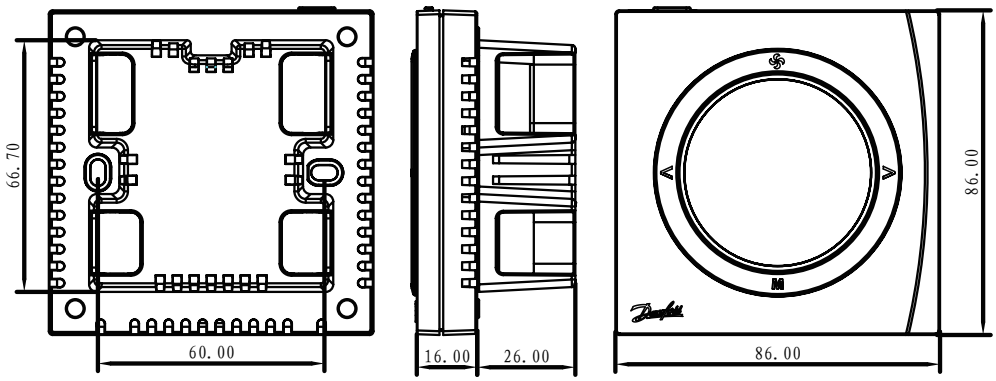

Fig. 6

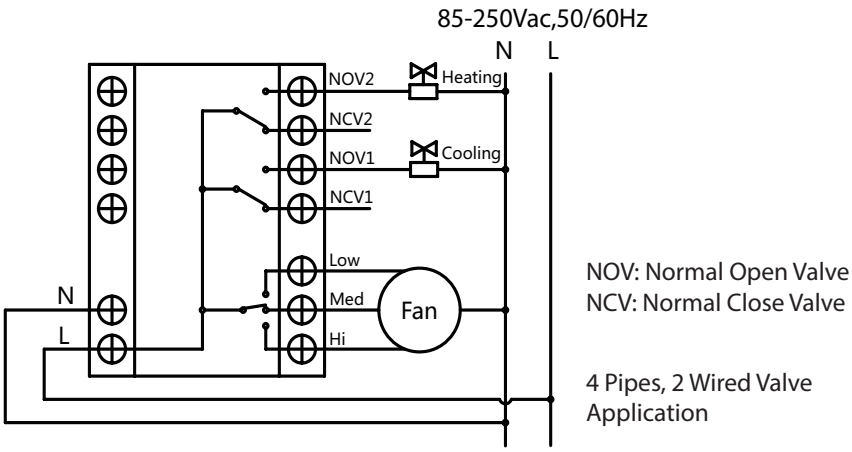

GB

Fig. 7

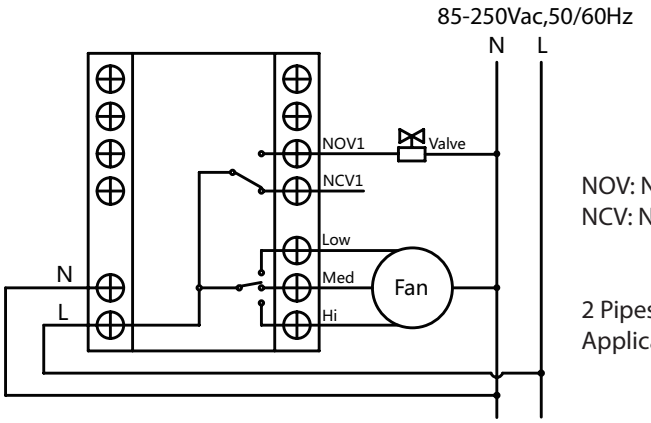

NOV: Normal Open Valve
NCV: Normal Close Valve

2 Pipes, 2 Wired Valve Application

Fig. 8

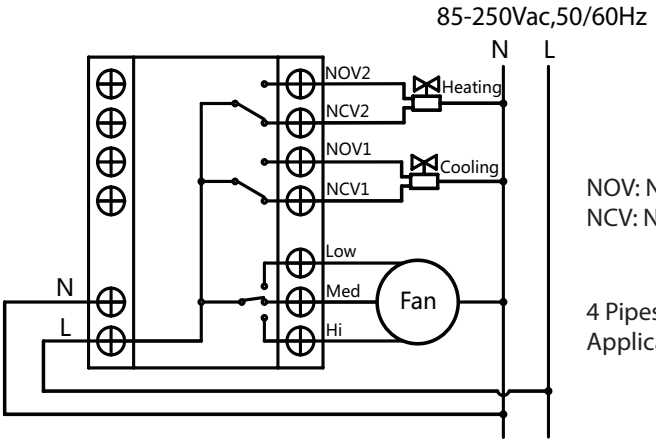

NOV: Normal Open Valve
NCV: Normal Close Valve

4 Pipes, 3 Wired Valve Application

Fig. 9

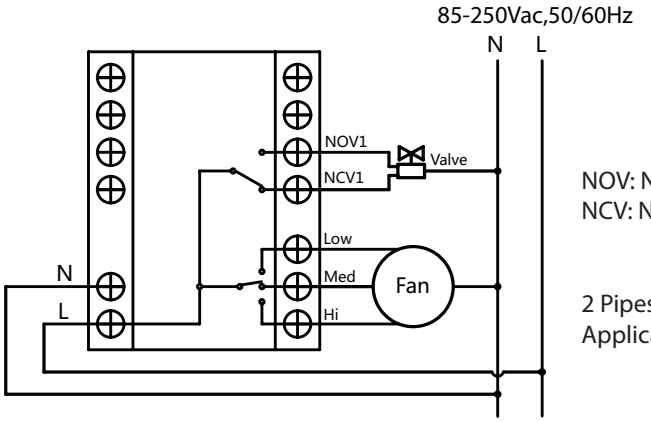

NOV: Normal Open Valve
NCV: Normal Close Valve

2 Pipes, 3 Wired Valve Application

GB

Description of Hazardous Substances and content
产品中有害物质的名称及含量

Part Name 零件名称	Hazardous Substances 有害物质					
	Lead (Pb) 铅	Mercury (Hg) 汞	Cad-mium (Cd)镉	Chromium VI Compounds (Cr(VI)) 六价铬化合物	Polybrominated Biphenyls (PBB) 多溴联苯	Polybrominated Diphenyl Ethers (PBDE)多溴二苯醚
Thermistor 热敏电阻	X	O	O	O	O	O
Diode 二极管	X	O	O	O	O	O
SMD diode 贴片二极管	X	O	O	O	O	O
Crystal oscillator 晶振	X	O	O	O	O	O

This table is prepared in accordance with the provisions of SJ/T 11364. 本表格依据 SJ/T 11364 的规定编制

O: Indicates that said hazardous substance contained in all of the homogeneous materials for this part is below the limit requirement of GB/T 26572. 表示该有害物质在该部件所有均质材料中的含量均在 GB/T 26572 规定的限量要求以下

X: Indicates that said hazardous substance contained in at least one of the homogeneous materials used for this part is above the limit requirement of GB/T 26572. 表示该有害物质至少在该部件的某一均质材料中的含量超出 GB/T 26572 规定的限量要求

Danfoss A/S
Heating Segment • heating.danfoss.com • +45 7488 2222 • E-Mail: heating@danfoss.com

Danfoss can accept no responsibility for possible errors in catalogues, brochures and other printed material. Danfoss reserves the right to alter its products without notice. This also applies to products already on order provided that such alterations can be made without subsequential changes being necessary in specifications already agreed.
All trademarks in this material are property of the respective companies. Danfoss and the Danfoss logotype are trademarks of Danfoss A/S. All rights reserved.

Produced by Danfoss Heating Segment 02/2019